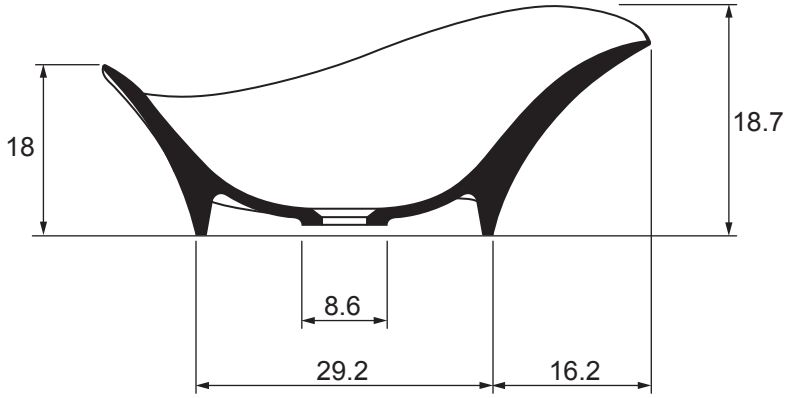

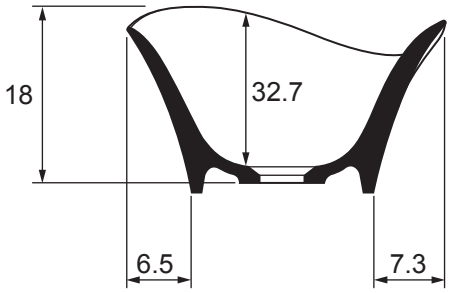

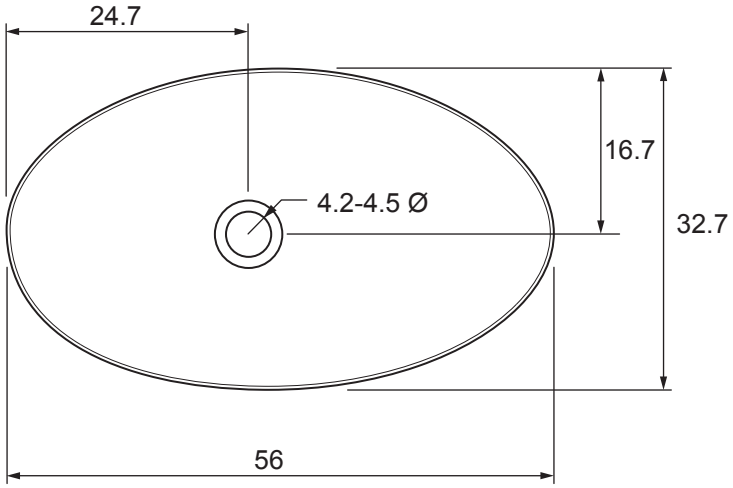

Dimensions in Centimeters

ALICE BASIN CT5367URW
Without overflow Countertop