crosswater

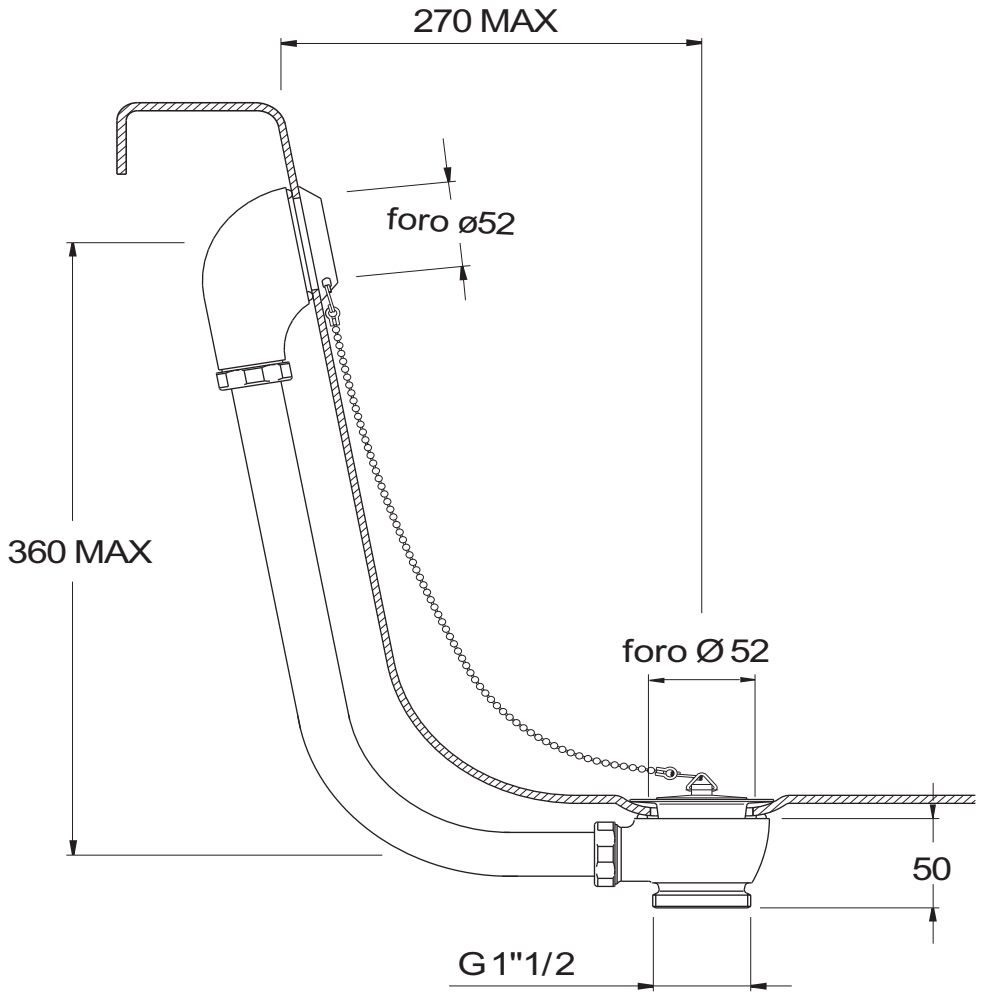

BTW0222C - BATH WASTE EXPOSSED With Plug & Chain