crosswater

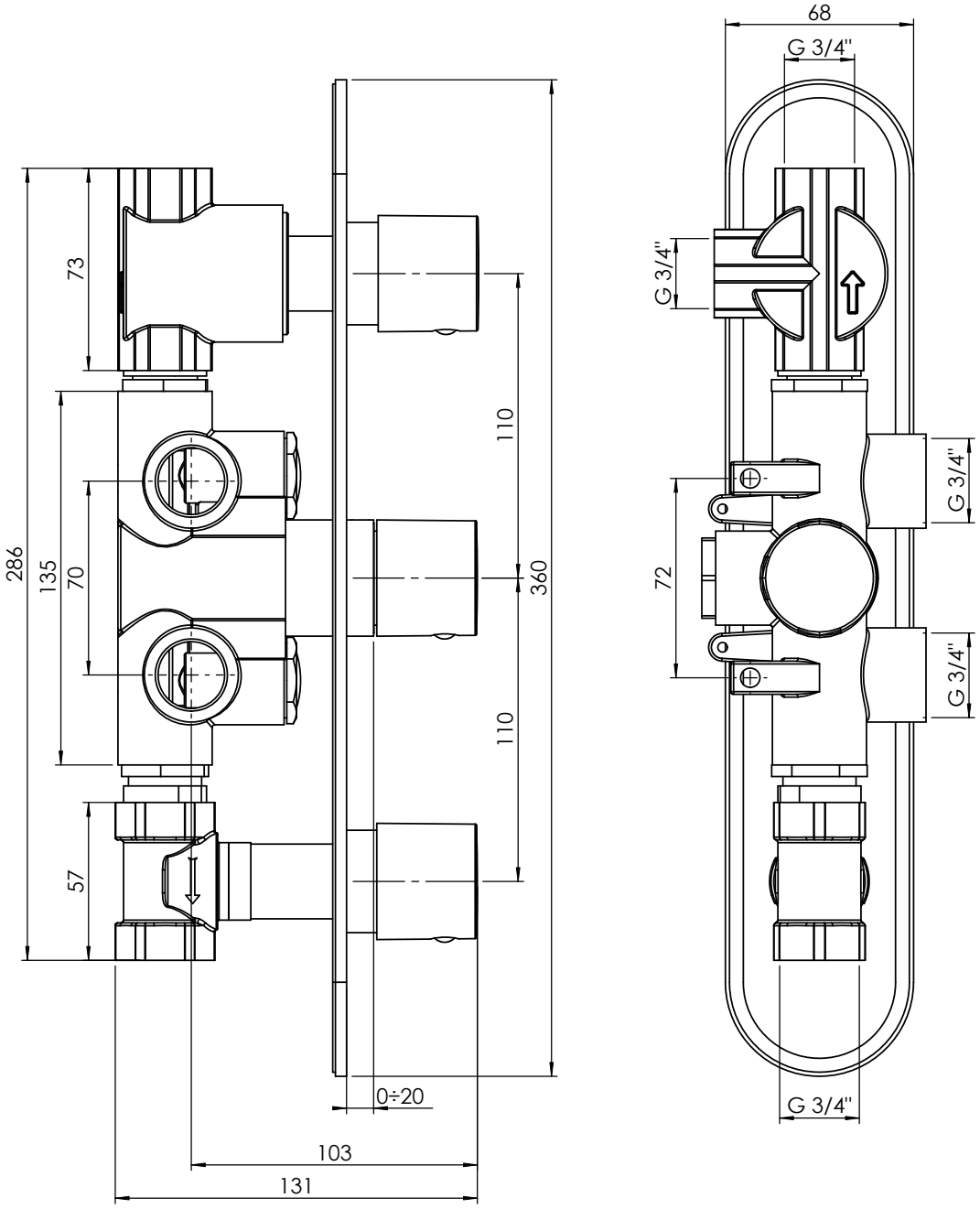

CE3000RC - CENTRAL THERMOSTATIC SHOWER VALVE

3 Way 3 Control Portrait