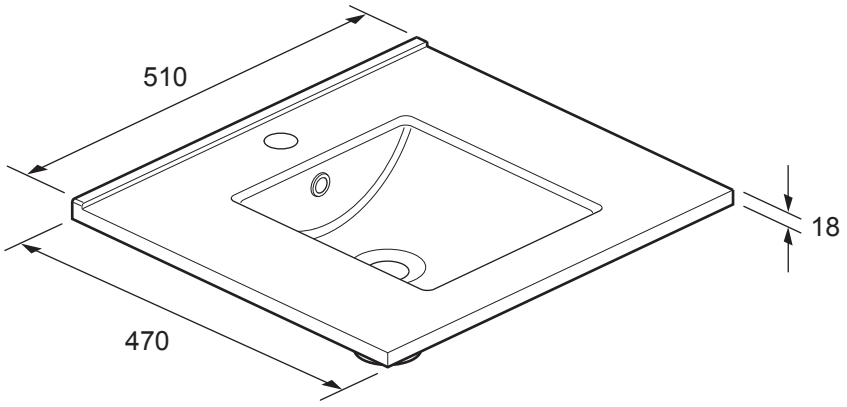

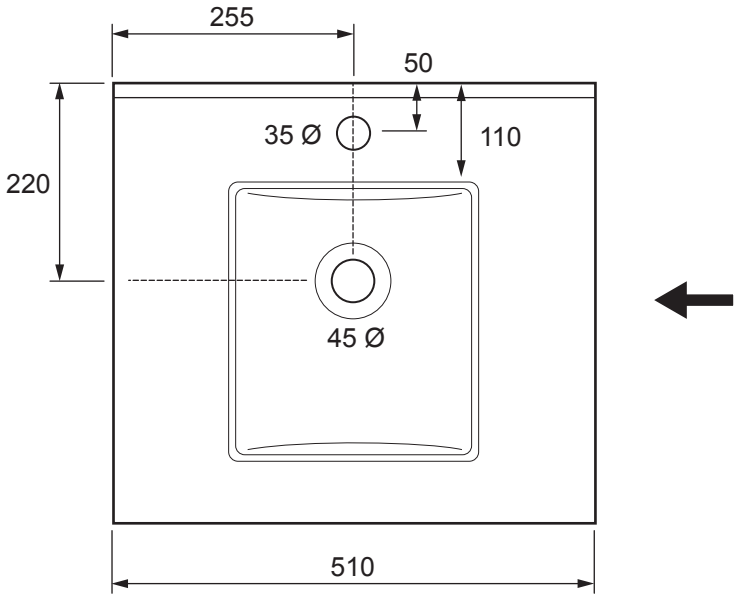

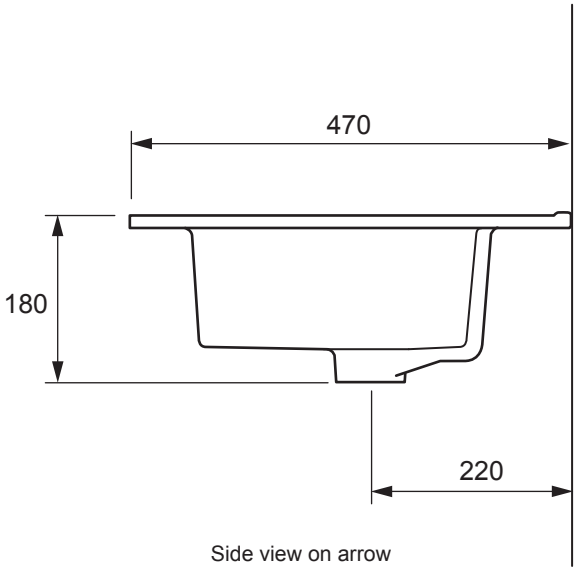

Side view on arrow

Dimensions in Millimeters

GLIDE II 50cm CERAMIC BASIN - DE0002SCW