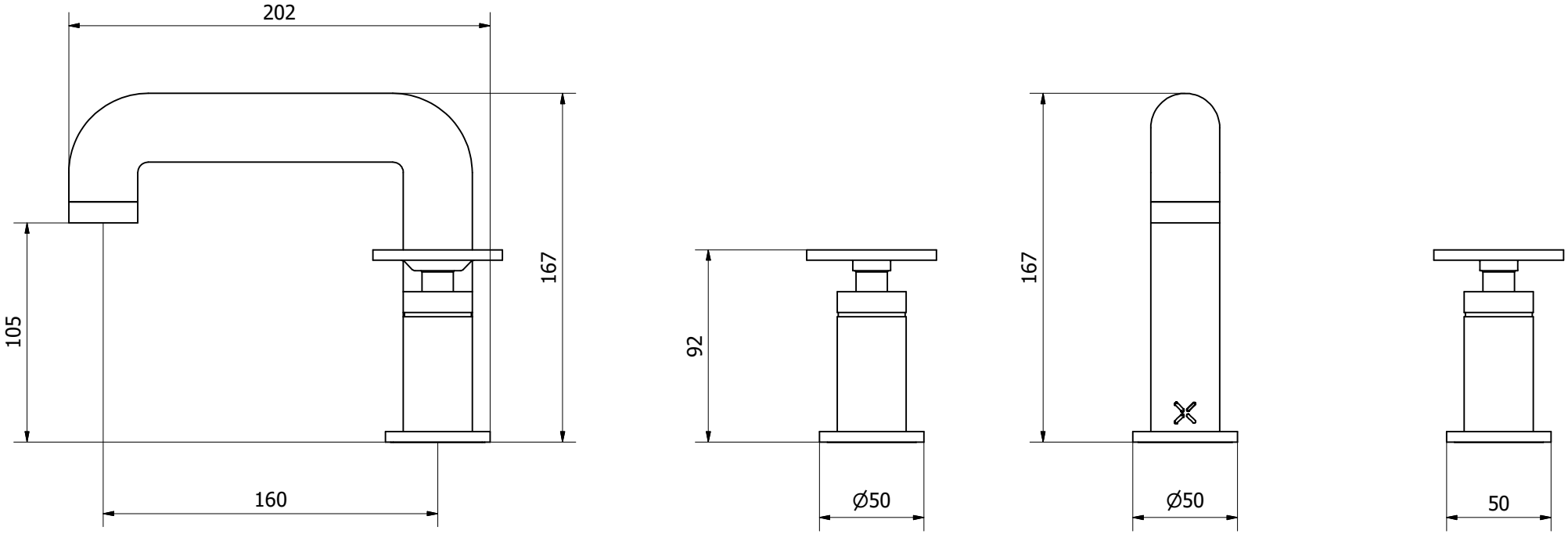

crosswater