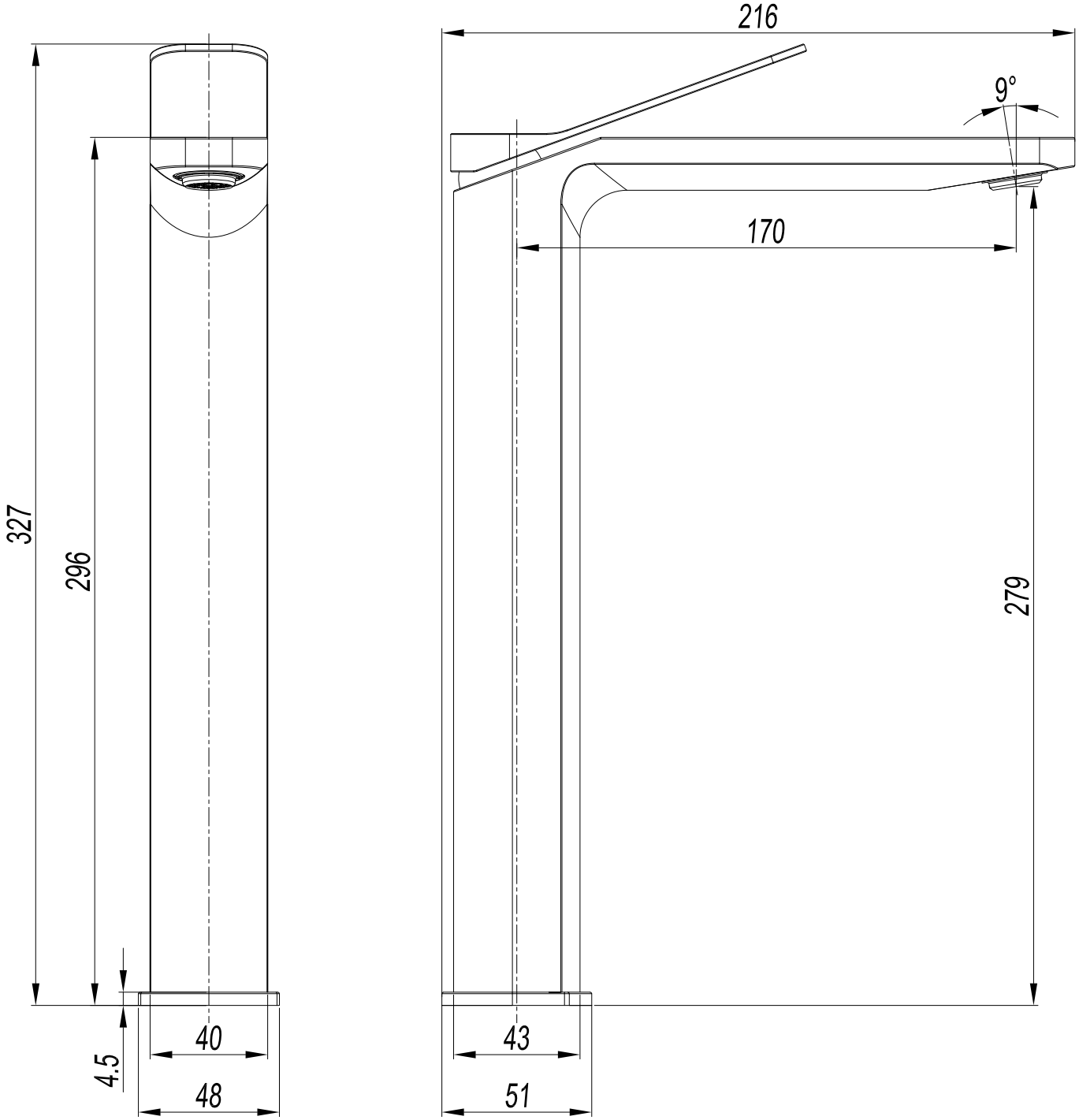

crosswater®

GD112DNC/V/M/F