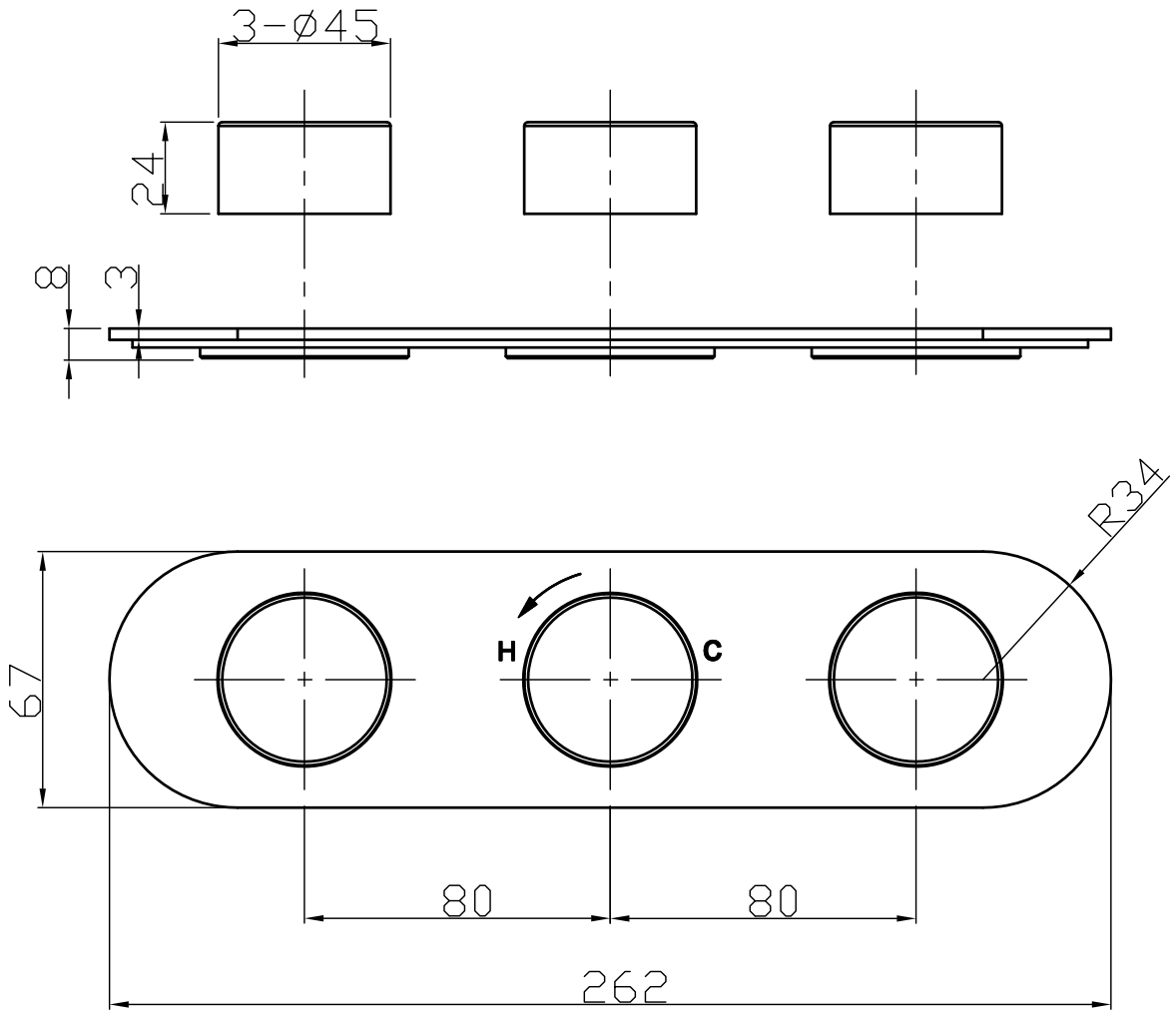

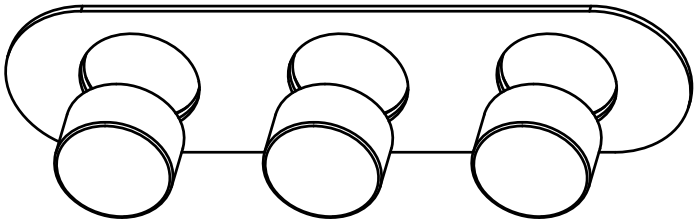

CE2001LBPx