crosswater

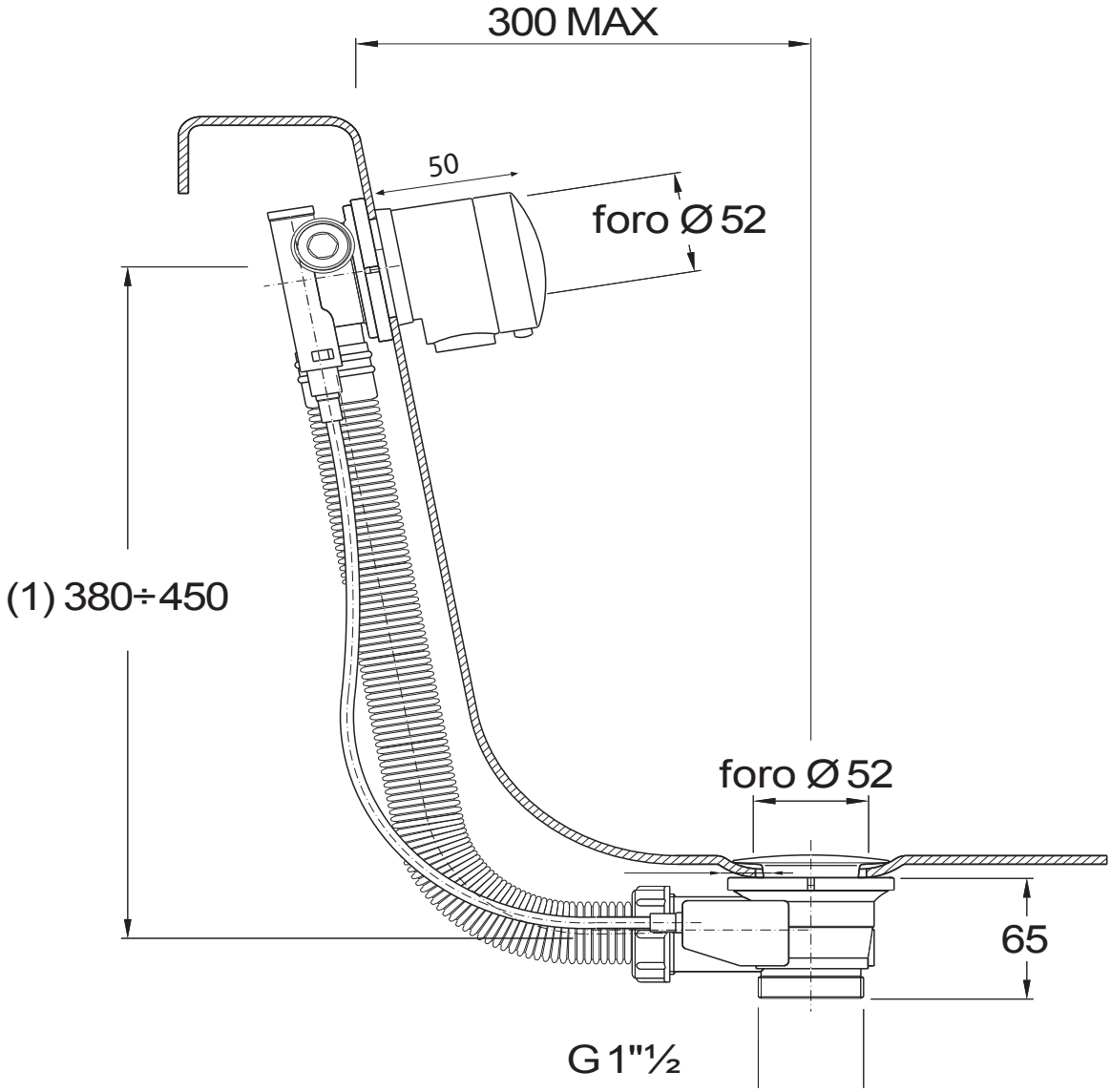


BFW0341C - BATH POP-UP-WASTE With Filler