measurements in millimetres (mm)
information updated November 2014

tel | 01322 422767
web | www.crosswater.co.uk
email | technical@crosswater-holdings.co.uk

crosswater
TECHNICAL

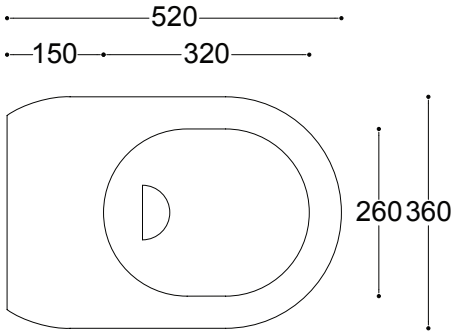

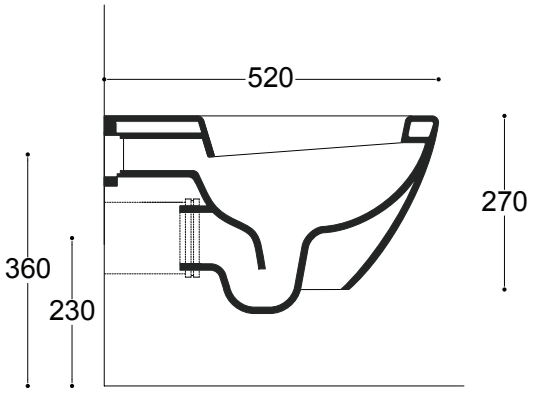

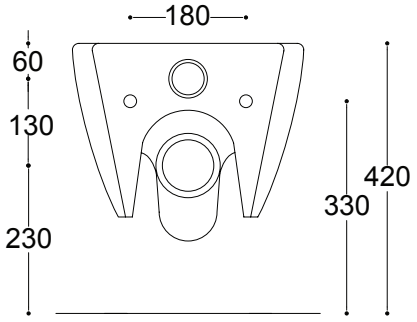

bauhaus

Svelte Wall Hung Pan

Wall Mounted

SE6006CW